Heavy Vehicle Axle Dynamics; Rig Development Instrumentation, Analysis Techniques

J.H.F. Woodrooffe[1] P.A. LeBlanc[1]

ABSTRACT

A study has been undertaken to determine the dynamic wheel loading characteristics of various heavy vehicle suspensions common to North American trucks. The generic suspensions examined are the leaf spring suspended walking beam, rubber spring suspended walking beam, air suspension and the four spring suspension. Variations in suspension axle spacing have been included in the program.

The principle requirement of the study is to produce data on the magnitude and frequencies of dynamic loading from all axles on a typical tractor semi trailer over representative roads at normal operating speeds.

To optimize control over various vehicle parameters during the test program, a tractor semi trailer highway transporter has been modified to allow for the exchange of different suspensions and to allow for changes in the inter axle spacing.

Instrumentation techniques were developed to measure vertical dynamic wheel loads, vertical axle acceleration, and brake torques from all major axles, simultaneously. All data was recorded on board the vehicle in the analog state.

The paper presented at this symposium will discuss the vehicle modifications, instrumentation and the methods of analysis used.

INTRODUCTION

The work presented here focuses on the development of hardware and a general description of instrumentation, test procedures and analysis techniques used for a heavy vehicle suspension study. The suspension study was supported jointly by Canroad Transportation Research Corporation and by the National Research Council of Canada, Division of Mechanical Engineering, Vehicle Dynamics Laboratory. It formed part of the RTAC/CCMTA Heavy Vehicle Weights and Dimensions Study. The purpose of the study was to provide the road regulatory authorities with factual data on the first order effects of suspension variations in terms of dynamic wheel loading as seen by the pavement. Simply put, the objective of this suspension study was to answer the following questions.

1. How well do multi-axle truck suspension equalize load?

2. What are the dynamic wheel forces associated with typical suspension types?

3. How do variation axle spacing effect the dynamic wheel loads and the load equalization capabilities of a given suspension?

4. What is the effect of variations in vehicle speed and road roughness on dynamic wheel loads?

In addition to these four basic questions, typical examples of dynamic axle loads associated with discontinuities in the road structure were provided. Included in this category are the following:

1. dynamic bridge loading associated with smooth and rough approaches.

2. dynamic road loading associated with a grade level railway crossing.

3. dynamic road loading associated with various pavement conditions such as:

   - rigid pavement nearing the end of its acceptable life.

   - old flexible overlay on rigid pavement base with reflective cracking.

1 National Research Council of Canada, Division of Mechanical Engineering, Vehicle Dynamics Laboratory, Ottawa, Canada

- new smooth overlay on rigid pavement.
- end of overlay transition bump.
- rough and smooth flexible pavements.

Finally, the effect of vehicle braking and suspension equalization were examined.

This paper will concentrate on the development of the vehicle used, the instrumentation, test program and analysis techniques used. No results from the study will be presented here, however, the results can be found in reference (1).

PRINCIPLES AND ASSUMPTIONS GOVERNING THE CHOICE OF HARDWARE

In order to accurately measure the performance characteristics of heavy vehicle suspensions, as a function of road roughness variations and suspensions parameter changes, considerable thought was required for the choice of vehicle to be used during the test program. It is well known that general vehicle characteristics such as vehicle mass, chassis compliance (both bending and torsion) will effect the vertical dynamics and hence the dynamic axle loads of a vehicle. To accurately study the effect of suspension variations, these external influences must be held constant so that their contribution to vehicle response is not confused with those associated with a suspension parameter change.

Bearing in mind these concerns, the following points were used as guidelines in developing a vehicle suitable for these experiments.

1. The vehicle must be stiff in bending (beaming) and torsion so that structural compliance of the vehicle does not interfere with the response of the vehicle when a suspension parameter change is made.
2. The size and weight of the vehicle should be representative of large vehicles used in Canadian Interprovincial Trucking.
3. The weight of the vehicle must be controlled and must remain constant over time.
4. The modified chassis of the vehicle must permit rapid change out of suspensions and suspension components even when the vehicle is fully loaded.
5. Suspension components to be tested must cover the most common suspension types found on Canadian roads.
6. The suspensions must be fabricated in accordance with the manufacturers' instructions.
7. The suspensions must use the same make and model of axle, brake components and the same tires and rims.
8. The sensors used to measure force and torque cannot in any way effect the mechanical response of the suspension.
9. The vehicle's instrumentation system must continuously record all axle loads, brake torques and vertical accelerations simultaneously in analog form.
10. The sensors used must have minimum cross axis sensitivity and must be linear, with minimum hysteresis.

THE TEST VEHICLE

TRACTOR

A 1979 White Freightliner cab over tractor was refurbished to serve as the power unit for the study. Instrumentation recording systems were housed in the existing sleeper compartment which was fitted with a shock attenuating floating floor. All electronic data channels were routed though a connector junction box, wiring harness and patch board permanently fixed to the tractor. Electrical power was provided by an auxiliary power unit fixed to the tractor chassis.

The tractor was fitted with a new drive axle suspension. The suspension beams and drive axles were instrumented to yield vertical axle load, break torque and vertical axle acceleration. A vertical accelerometer was also fitted to the steering axle of the tractor as a check on the relative road roughness between runs. Since the vertical response of the front axle is somewhat independent of the drive suspension, and since the static weight on the front axle in constant, the response of the front axle formed a base line from which runs of the vehicle over the same stretch of road could be compared with confidence. In short,

if the front axle response characteristics were similar in energy content for two separate runs at the same speed over the same road but at different times of the year then one could be reasonably confident that the road roughness did not change significantly since the last time the test was run.

Finally, speed and distance were monitored by use of a trailing wheel.

TRAILER

A 1974 Fruehauf compartmentalized baffeled liquid tanker was refurbished for the study. the frame structure and original suspension were removed, scrapped and replaced by a new frame specifically designed for the purpose of this study.

The replacement frame was designed to accept different suspensions each mounted on its own sub frame. The sub frames could be moved to various positions on the main frame thereby permitting changes in the axle position and spacing.

INSTRUMENTATION

All dual tired axles of the tractor and trailer were instrumented to measure vertical axle load, vertical acceleration and brake torque as shown in Figure 2. Axle load measurement was achieved by the use of strain gauges on the axle sensitive to vertical bending of the axle. Brake torque was measured with strain gauges measuring strain in the axle along the torsional shear axis of the tube (ie 45° to the axle axis.) Both of these measurement techniques provided linear results with no significant hysteresis. The axle was fabricated from steel tubing with axle spindles friction welded to the tube without the use of a pilot shaft on the end of the spindle which is commonly pressed into the tube before welding. It was felt that the presence of a pilot shaft in the vicinity of the strain gauge section of the tube would detract from the linearity of the calibration curve.

The vertical acceleration of the axles was measured by strain gauge type accelerometers mounted on the same vertical axis as the load sensing strain gauges as shown in Figure 3. The acceleration component is necessary to account for the vertical inertial effects of the tires, wheels and brake components outboard of the load sensing strain gauges. This inertial component is added to the vertical axle load to determine impact load at the pavement.

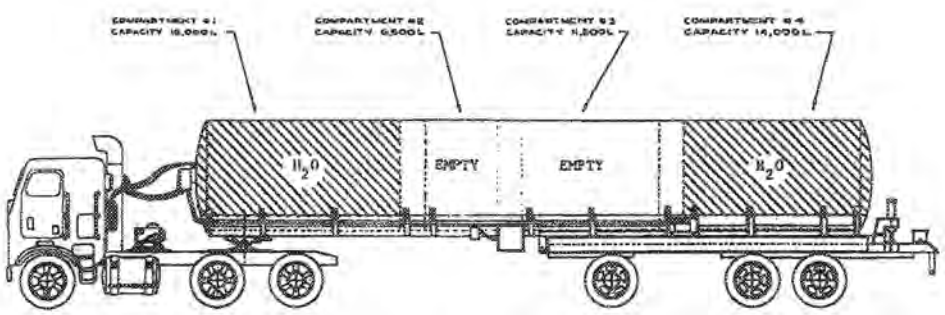

The NRC test vehicle

FIGURE 1

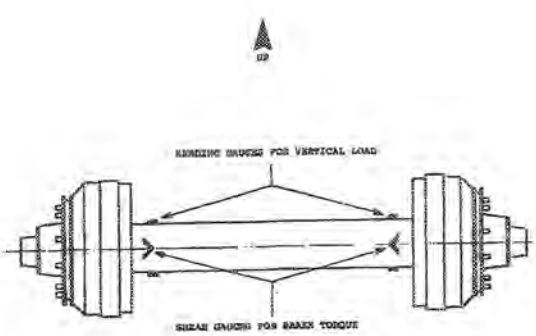

FIGURE 2

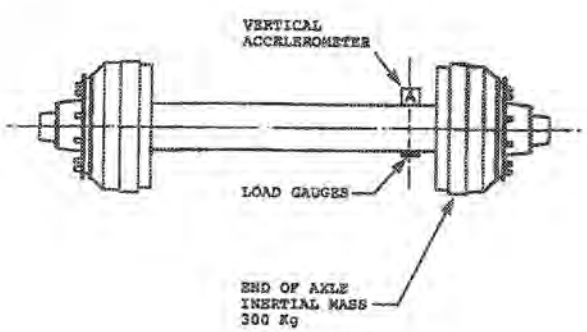

FIGURE 3

Accelerometers were also fixed to both ends of the tank. By combining the outputs of these accelerometers, both pitch and bounce of the trailer can be resolved.

Vehicle velocity and distance travelled was measured by an optically instrumented idler wheel mounted on the side of the trailer.

Quite by accident, it was observed that tire side forces in low speed turns could be resolved using the load sensing strain gauges in the axle. The side force induces a moment on the axle which when calibrated can be resolved into the magnitude of the side force. The prime limitation is that the cornering must be done at quasi-static speeds so that there is no roll induced load transfer to the axles.

AXLE LOAD VARIATIONS

Vehicle mass and spring constants are primary variables which first have order effects on vehicle vertical response. It was clear from the start of the study that control over mass variable was considered to be of prime importance. To achieve the constant mass, the force and aft compartments of the trailer were completely filled with water and sealed for the duration of the test program. Changes in axle load independent of vehicle mass variations were achieved through the use of an air suspended lift axle. The lift axle was located toward the longitudinal center of the trailer. The axle was controlled from the cab and could be raised clear of the road to increase the axle loads of the suspension being studied or lowered to decrease the axle loads.

This procedure allowed for constant control over the magnitude and the location of the suspended mass and its related properties such as pitch moment of inertia. Admittedly, the lift axle will have some influence on the vehicle response so care must be taken in interpreting the data generated when the lift axle is down. (This task is helped by the fact that the air suspended lift axle has a linear response and a well defined spring stiffness and viscous damping characteristics.)

For example, when the lift axle is used in conjunction with the four spring trailer suspension, the springs constant and damping coefficient of the air suspension are much less than those of the four spring trailer suspension. Changes in the vehicle responses therefore may be attributed more to a reduction in static axle load of the four spring as opposed to the suspension effects of the air axle. This would be particularly true when considering the pitch dynamics of the trailer. By way of contrast, when the lift axle is used with the trailer air suspension, the spring constants and damping coefficients are nearly identical thereby playing a more dominant role in vehicle response variations.

The approximate static axle loads used during the test program are shown in Table 1.

ROAD ROUGHNESS AND SPEED VARIATIONS

A range of road roughnesses were selected which covered the simple minded categories of smooth, medium and rough. The test roads chosen were uniquely different from one another thus serving different purposes during the test program. All suspensions were tested over the same test sections at the same speeds. The road roughness was determined by the use of a Mays Meter. The Mays Meter measurements were then correlated with Ride Comfort Rating (RCR) by the following equations:

RCR = 9.63 – 0.02 Mays Meter Measurement

The RCR scale defines

as Excellent,	RCR Values 10–8
as Good,	RCR Values 8–6
as Fair,	RCR Values 6–4
as Poor,	RCR Values 4–2
as Very Poor,	RCR Values less than 2

The vertical profile of two of the three roads was measured with a rod and chain.

What follows is a brief description of the test sites and the vehicle speeds used for each site.

Table 1 — Static axle loads used during test

Condition	Tractor drive suspension load metric tonnes per axle	Lift axle metric tonnes	Trailer suspension load metric tonnes per axle
1	10	–	10
2	8.4	7.6	7.8

A. Uplands Road North Bound Lane

- High Roughness — Section 1 - Mays roughness 254 IPM (RCR 4.6)

  Section 2 - Mays roughness 424 IPM (RCR 1.2)

- Test Speeds both sections 40, 60 km/hr

General description - A two lane undivided road with badly deteriorating flexible pavement. There was excessive pavement cracking in a random pattern. Although the posted speed limit is 80 km/hr, the ride in the truck became unacceptable beyond 60 km/hr. For this particular road 60 km/hr is about the limit that most drivers would be prepared to push their equipment.

B. Woodroofe Ave. (Between CNR Tracks and Slack Rd.) North Bound

- Rough level railway crossing
- Smooth to medium rough roadway - Mays roughness 73 IPM (RCR 8.2)
- Test speeds - 40, 60, 80 km/hr

General Description - A two lane undivided road with flexible pavement in good condition. Three speeds were chosen for this roadway 40, 60, 80 km/hr. The test section commenced with a grade level railway crossing which was impacted at full running speed. The analysis of the smooth road section commenced once the reaction of the vehicle to the railway crossing had dampened out. The dynamic wheel loads resulting from the railway crossing were analyzed separately.

C. Highway 417 (Between Maitland Ave. Overpass and Rochester Street Exit) East Bound

Three Sections

- smooth Mays roughness 59 IPM (RCR 8.5)
- medium Mays roughness 165 IPM (RCR 6.3)
- Rough Mays roughness 217 IPM (RCR 5.3)
- several bridge structures
- test speed - 80 km/hr

General Description - A multi-lane divided highway through an urban area. The roadway is in the process of being reconstructed therefore there are three distinct surfaces present within the single test section. The smooth section (RCR 8.5) is new flexible overlay on a rigid pavement base. The medium surface (RCR 6.3) in an older overlay on the same rigid pavement. Reflective transverse cracking is evident. The rough surface (RCR 5.3) is the original rigid pavement in dire need of repair. These three surfaces were in close proximity to each other which allowed for continuous recording of all three surfaces during the same pass. The speed was held constant at 80 km/hr. This test section also contained several bridge structures with different approach roughnesses. Some approaches were undetectable by our instruments while some others gave very high reactions.

SINGLE BUMP TESTS

In addition to conducting tests on various roadways, there were a series of tests conducted with discrete bumps. These tests included both quasi static or creeping over the bumps as well as dynamic impacts at various speeds.

The bumps were created by placing standard dimensional lumber across the road parallel to the axle axis of the vehicle.

The quasi static or creep tests were used to measure quasi static load equalization while the high speed runs were used to "pluck" the suspension system so that the natural frequencies and apparent damping coefficient could be resolved. The ability of the suspensions to mitigate dynamic impact axle loads was also determined from the high speed runs. A listing of the bump arrangements and tests speeds follows.

(a) Quasi static creep tests (first gear deep reduction with engine idling).

- Two planks side by side 4 cm x 48 cm
- Three planks side by side 4 cm x 27 cm
- Two planks side by side with a third plank centered on top of the bottom two 8 cm x 48 cm.

(b) Dynamic impacts

Speeds - Top end of first gear

- 18 km/hr

- 40 km/hr

All dynamic impacts were done at the above speeds over a single wooden plank fixed to the road surface having cross sectional dimensions of 4 cm x 24 cm.

Speed control during all tests was achieved by selecting the appropriate gear with the engine set against the maximum RPM governor.

GRADE LEVEL RAILWAY CROSSING BUMP

A single, grade level railway crossing was used in order to get a 'feel' for the dynamic axle loads that can be expected from such an input. The Mays Meter roughness output for the 80 meter increment of road containing the approaches and the crossing,was 252 IPM (RCR 4.6). Recognizing that this roughness figure is somewhat ambiguous. the general consensus was that in terms of roughness, the railway crossing could be considered to be typical.

The vehicle speed used during the crossing were 40, 60, and 80 km/hr. The road roughness in the vicinity of the crossing was approximately 60 IPM (RCR 8.4).

DYNAMIC BRIDGE LOADING

A number of bridges were crossed during each of the tests conducted on highway 417. The bridge approaches varied from smooth (undetectable) to very rough.

STATIC WHEEL LOAD MEASUREMENTS

When a new suspension was installed on the vehicle or when the axle spacing was changed, the vehicle's static wheel force was measured on a flat level concrete floor.

The procedure used was to place jacks under the chassis of the fully loaded vehicle and then raise the vehicle until the wheels were off the ground. All load sensing strain gauge bridge circuits were balanced to zero and then the vehicle was lowered and the jacks removed. The voltage change across the bridge circuits was measured using a digital voltmeter and the wheel load was then calculated using the appropriate calibration constants.

STATIC PITCH TEST

The static pitch test was used to determine the static load sharing characteristics of various suspensions as a function of trailer pitch angle. The intent was to explore the magnitude of the suspension equalization variations that can be expected when the tractor and trailer riding heights are mismatched. Heavy jacks were used to raise the fully loaded vehicle at the tractor's fifth wheel there by inducing a pith angle to the trailer's suspension.

SHAKE TEST

NRC's four post shaker rig was used to demonstrate the importance of considering inertial forces outboard of the strain gauge when evaluating dynamic wheel loads. The experiment consisted of lowering the air suspension lift axle on two load cells and exciting the wheels of the axle with two hydraulic actuators.

ANALYSIS

RESOLUTION OF DYNAMIC WHEEL LOAD

The resolution of vertical wheel loads at the pavement surface requires two data sources. One being the dynamic axle load as measured by the strain gauged axles and the other being the vertical inertial component of the mass outboard of the strain gauges. This mass is comprised of tires, rims, brake hardware and a portion of the axle. The inertial forces is resolved by multiplying the measured vertical acceleration of the axle by the above mentioned mass. The sum of the vertical axle force and the vertical inertial force yields the force as seen at the tire/roadway interface.

In algebraic terms

Total Dynamic Wheel Force at the Pavement Surface	=	Dymanic Axle Load	+	Vertical Acceleration of the Axle	x	End of Axle Mass

The following brief analysis proves the need to consider the vertical inertial forces.

The derivation of the equation of motion (1) makes use of the following assumptions. First, the axle bending moments at points A and B in Figure 4 are zero and the member is free of axial load. the axle is considered to be a rigid body with two degrees of freedom, namely, bounce and roll, described respectively by x and α.

A free body diagram of the axle reveals that the reaction at the point A, R_A, is a function of the

forces transmitted by the leaf springs or air bags, F1 and F2, and the inertial forces of the axle:

$$R_A = F_1 + (F_2 - F_1)a/l - 1/2\, m_a\ddot{x} + I_a\ddot{\alpha}/l \quad (1)$$

The term ma is the mass of the axle and Ia is the axle roll moment of inertia about its center of mass. The linear dimensions a and l are defined in Figure 5.

Assuming that the strain gauge at point A' accurately monitors the reaction RA, one may proceed with the analysis of the free diagram shown in Figure 6.

The equation of motion for the above figure is simply

$$m_1\ddot{x}_1 + c_1\dot{x}_1 + k_1x_1 = R_A \quad (2)$$

The load transmitted to the pavement, T, is given by

$$T = k_1x_1 + c_1x_1$$

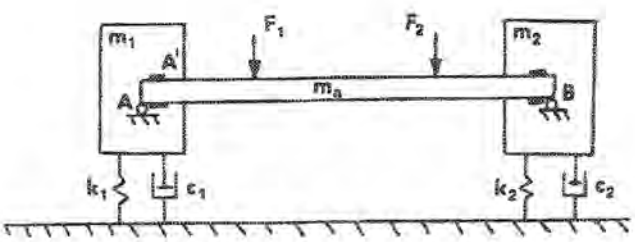

FIGURE 4

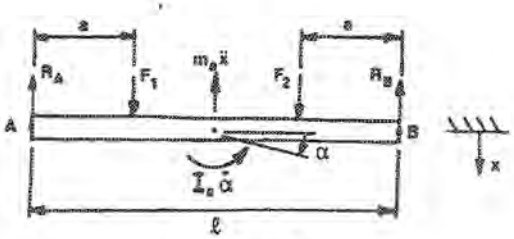

FIGURE 5

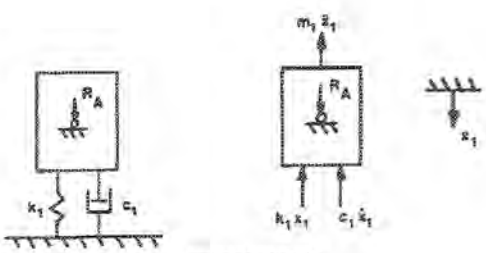

FIGURE 6

By making use of equation (2), T can be expressed in the form,

$$T = R_A - m_1\ddot{x}_1 \quad (3)$$

where m1 is the inertial mass outboard of the strain gauge and x1 is the vertical acceleration of the inertial mass.

The breakdown of the inertial mass component is as follows:

Tires and Rims Qty 2	207.5 kg
Hub and Drum Qty 1	62.2 kg
Brake Shoes Qty 2	16.3kg
Brake S Cam Shaft Qty (1/2)	3.1 kg
Wheel Studs and Nuts Qty 10	1.5 kg
Bare Axle Qty 1/10	10.6 kg
Total Inertial Mass	301.2 kg

The inertial mass was taken as 300 kg.

Summing of the axle forces and the inertial forces was done in the analogue state using operational summing amplifiers. Depending on the analysis technique required, the summed analogue signal was transferred to a strip chart recorder for direct interpretation of the data or it was digitized for numerical analysis.

The numerical analysis was performed with a IBM-AT personal computer. The computer was equipped with a four channel analogue to digital converter, and the necessary software was developed to perform the numerical functions.The statistical functions of interest were:

- the mean
- first standard deviation
- 5th and 95th percentile and their corresponding histogram plots.

The sampling rate was 300 points/sec/channel.

The dynamic load coefficient was intended as the principle numerical quantity to be used for the analysis of continuous dynamic data. Known in statistics as the coefficient of variation, the DLC is defined as:

$$DLC = S/Z$$

S = standard deviation of the wheel forces distribution (kN)

Z = overall mean wheel forces (kN)

The introduction of the DLC is based in the assumption that its numerical value is independent of the variation in the overall mean wheel force. Hence, the DLC allows one to compare different suspensions tested with different overall mean wheel loads. However, we find that a change in Z leads to a variation in the DLC.

Take foran example the test condition where the truck had a walking beam suspension as the drive axles and a four spring suspension as the trailer axles. A test was carried out where the drive axle wheel loads were decreased by 13%. The decrease in the standard deviation was evaluated at 6% instead of the expected 13% decrease. By comparison when the four spring trailer axle load was reduced by 24%, there was a reduction inthe standard deviation of 19% which is within acceptable limits.

It is evident from this exercise that the relationship between S and Z may not be linear and moreover it may be dependent on the suspension type, that is

$$S = DLC \times Z$$

where

$$DLC = DLC\ (Z,\ \text{suspension type})$$

To eliminate possible confusion resulting from variations in the static wheel load, the DLC was not used as the primary analysis term. It was replaced by the standard deviation of the dynamic wheel force. This term was examined as a function of vehicle speed, road roughness and suspension type. The DLC did prove useful however, during the final analysis with appropriate consideration.

SHAKE TESTS

To further explore the axle force and inertial force contributions of the vehicle measurement system, a vertical shake test was performed. The air lift suspension of the fully loaded vehicle was supported st the tires with two electro hydraulic vertical actuators. A low amplitude sinusoidal input equal to the resonant frequency of the suspension was applied. The configuration of the Dynamics Laboratory required that the rear end of the trailer be supported by an overhead crane. The tractor, for its part, rested on the ground in its usual position. Figure 7 depicts a model of the spring mass system under study.

The span between points A and B is assumed to be small enough so that the displacement x_1 of the trailer mass, M, describes the motion of both points A and B, despite possible pitch of the trailer. The mass elements m_1, m_2 and m_3 are assumed to be rigidly attached to one another. The quantity m_2 represents the mass outboard of the strain gauge, while m_1 and m_3 are the mass of the radius arm and axle respectively. A free body diagram of the system is shown in Figure 8.

The sum of the moments about point O leads to

$$k_2(l_2\theta + x_1 - h)l_2 + c_2(l_2\dot{\theta} + \dot{x}_1 - \dot{h})l_2 + k_1 l_1^2\theta + c_1 l_1^2\dot{\theta} + k_3 l_3^2\theta + c_3 l_3^2\dot{\theta} + I\ddot{\theta} + m_3 l_2^2\ddot{\theta} + m_1 L_1\ddot{x}_1 + m_3 l_2\ddot{x}_1 + m_2 l_2^2\ddot{\theta} + m_2 l_2\ddot{x}_1 = 0 \quad (4)$$

The linear dimensions l_1, l_2 and l_3 are as defined on Figure 8, I is the mass moment of inertia of m_1 about point O, L_1 if the distance of the mass center of m_1 from point O and k_1, k_2, k_3 and c_1, c_2, c_3 are stiffness and damping coefficients respectively.

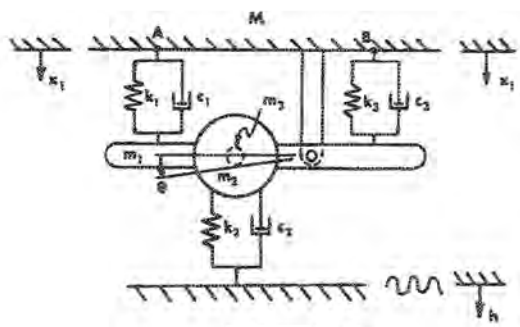

FIGURE 7

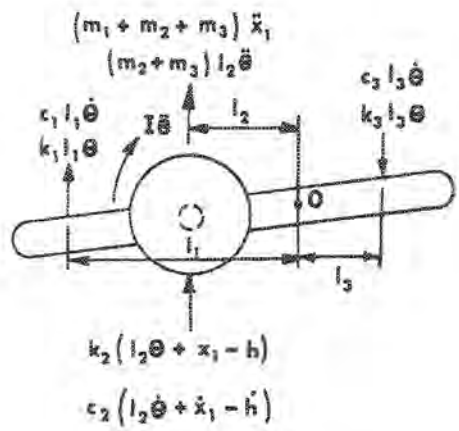

FIGURE 8

The sign convention adopted for the axle strain gauge is the following: a downward force applied to the axle inboard of the strain gauge is considered positive and results in a positive voltage output. Hence the force FS monitored by the strain gauge (that is the inertial and spring forces inboard of the strain gauge) takes the form

$$F_S = -(k_1 l_1^2 \theta + c_1 l_1^2 \dot{\theta} + k_3 l_3^2 \theta + c_3 l_3^2 \dot{\theta} + I\ddot{\theta} + m_3 l_2^2 \ddot{\theta} + m_1 L_1 \ddot{x}_1 + m_3 l_2 \ddot{x}_1) \div l_2 \quad (5)$$

Defining the actuator force FA as being positive in the upward direction leads to

$$F_A = c_2(l_2\dot{\theta} + \dot{x}_1 - \dot{h}) + k_2(l_2\theta + x_1 - h) \quad (6)$$

Equation (4) can therefore be written as

$$F_A = F_S - m_2\ddot{x}_2 \quad (7)$$

where $x_2 = l_2\theta + x_1$ is the vertical acceleration of m_2 which is monitored by an accelerometer fastened to the axle right next to the wheel hub. The final result (equation (7)) is identical to that obtained in equation (3). Processing the results of the shake test required the following analysis.

As illustrated in Figure 7 the spring mass system from the shake test experiments could be modeled as a two degree of freedom system. However, to verify that the general properties of the mechanical system are properly monitored, it is less cumbersome to treat the axle-wheel combination as a one degree of freedom system with no damping. The following paragraphs justify such a simplification.

The shake tests were conducted without shock absorbers on the air suspension, thus considerably reducing the magnitude of the damping coefficients c1 and c3 of Equation (4). Upon neglecting viscous forces associated with tires and bags we obtain, for a sinusoidal forcing function, the following steady state solution for the strain gauge force:

$$F_S = [(k_1 l_1^2 + k_3 l_3^2) - \omega^2(I + m_3 l_2^2)]\ddot{x}_2 / l_2^2\omega^2 + [\omega^2(I - m_1 L_1 l_2) - (k_1 l_1^2 + k_3 l_3^2)]\ddot{x}_1 / l_2^2\omega^2$$

The factors multiplying x_1 and x_2 are of the same order of magnitude, however, video tape of the experiment clearly showed that the displacement x_1 was of second order in comparison with x_2. Hence Fs may be approximated to

$$F_S = [k_1 l_1^2 + k_3 l_3^2 - (I + m_3 l_2^2)\omega^2]\ddot{x}_2 / l_2^2\omega^2 \quad (8)$$

which is precisely the result obtained from a one degree of freedom analysis. By making use of the steady state solution for a one degree of freedom system we may rewrite the expression for the actuator force, Equation (6), as

$$F_A = [k_1 l_1^2 + k_3 l_3^2 - (m_2 l_2^2 + I + m_3 l_2^2)\omega^2]x_2 / l_2^2\omega^2 \quad (9)$$

Equations (8) and (9) reveal that for small driving frequencies ω the vertical acceleration x_2 is in phase with Fs and F_A. As we increase the driving frequency we can expect a 180° phase shift between x_2 and the signals Fs and F_A.

If we define ω_A and ω_S as the frequencies at which a 180° shift occurs between F_A and x_2, and Fs and x_2, then the following results can be established from Equations (8) and (9):

$$\omega_A < \omega_n \ , \ \omega_S > \omega_A$$

where the natural frequency for the system, ω_n, is

$$\omega_n^2 = (k_1 l_1^2 + k_2 l_2^2 + k_3 l_3^2)/(m_2 l_2^2 + I + m_3 l_2^2)$$

All of the above theoretical observations have been experimentally confirmed. The quantities ω_A, ω_S and ω_n were measured as

$\omega_A \approx$ 4.5 Hz

$\omega_S \approx$ 6.5 Hz

$\omega_n \approx$ 11.0 Hz

The simplifications which were made in the above discussion served only to insure that the instrumentation properly monitored the general mechanical behaviour of the system. It must be emphasized that these simplifications are not required in the analysis of dynamic calibration. If the model described in section 5.2 is accurate then the strain gauge and load cell will monitor precisely every term in Equations (5) and (6). Hence Equation (7) remains an exact relation.

Shake tests were preformed at several different driving frequencies and amplitudes. Using Equation (7) the inertial mass outboard of the strain gauge was evaluated at 234 kg with a standard deviation of 9 kg. This value is 22% lower than the actual mass outboard of the strain gauge.

A portion of the discrepancy between the outboard mass measured from dynamic calibration and the actual mass of the wheel could probably be attributed to the fact that the elements of the tires are not all accelerated at x2. The wheel could be modeled with say, one third of the mass of the tires (38 kg) having a vertical acceleration of h while the remaining portion of the wheel be accelerated at x2. For cases where h is small this would account for 57% of the difference in the recorded mass.

Although dynamic calibration is in its preliminary stages of development the experiment confirmed the presence and the importance of measuring the inertial forces associated with the mass outboard of the strain gauge. For example, when excited at the frequency of 11 Hz the inertial forces accounted for 58% of the force transmitted to the shaker's load cell.

The dynamic calibration experiment suggests that a 22% lower inertial mass should be used when evaluating the inertial forces. However, before the mass obtained from dynamic calibration can be confidently used we must develop a mathematical model of the wheel which will account for its entire static mass. Also the four post shaker is a complex apparatus for which the accuracy and limitations have yet to be fully assessed.

Any error associated with the simplified model used to determine the inertial forces applies equally to all suspensions tested. Although the actual wheel force may be in error by as much as 10% depending on road roughness, the accuracy of the system for unit comparison is better than 5%.

CONCLUSION

This paper outlines the hardware, instrumentation and analysis details of an experimental test program.

1. Experiments conducted during this test program produced dynamic wheel load data of high quality and consistency.

2. The usefulness of single impact testing proved to be small when compared with over-the-road variable roughness testing.

3. Statistical analysis of the data seems most appropriate for dynamic road loading studies. Frequently domain analysis would be better suited to ride quality work.

4. Further research effort should be given to resolve the wheel inertial mass discrepancy between assumed values and measured values.

REFERENCES

1. Woodroofe, J.H.F., LeBlanc, P.A., LePlane, K.R., 'Effects of suspension variation on the dynamic wheel loads of a heavy articulated highway vehicle' Final Report to RTAC/CCMTA Weights and Dimensions Study, July, 1986.

2. Gillespie, T.D. (1985) 'Heavy Truck Ride', Society of Automotive Engineers, The Thirty-First L.Ray Bucjendale Lecture, SP-607.

3. Cebon, D. (1985) 'An Investigation of the Dynamic Interaction Between Wheeled Vehicles and Road Surfaces', Ph.D. thesis submitted to the department of Engineering, University of Cambridge.

4. Heath, A.N. and Good, M.G. (1985) "Heavy Vehicle design Parameters and Dynamic Pavement Loading', Australian Road Research, 15(4), pp. 249-263.

5. Görge, W. (1984) 'Evaluation of Research reports concerning - The influence of commercial vehicle development and design on the road fatigue', Forschungsvereingung automobiltechnik e.v., Frankfurt, West Germany.

6. Magnusson, G., Carlsson, H.E. and Ohlsson,E. (1984) 'The influence of heavy vehicles' springing characteristics and tyre equipment on the deterioration of the road', Swedisf Road and traffic Research Institute (VTI), VTI Report No. 270, Linköping, Sweden.

7. Sweatman, P.F. (1983) 'A study of dynamic Wheel Forces in Axle Group Suspensions of

Heavy Vehicles', Australia Road Research Board, Special Report No. 27, Vermont South, Australia.

8. Dickerson, R.S. and Mace, D.G.W. (1981) 'Dynamic pavement force measurements with a two-axle heavy good vehicle', Department of the Environment, TRRL Supplementary Report 688, Crowthorne, Berkshire (Transport and Road Research Laboratory).

9. Hooker, R.J. (1980) 'A Model for the radial dynamic behaviour of pneumatic tires', Int. J. of Vehicle design, vol. 1, no. 4, pp.361-372.

10. Page, J. (1974) 'A review of Dynamic Loading Caused by Vehicle Suspensions', Department of the Environment, TRRL Supplementary Report 82UC, Crawthorene, Berkshire (Transportation and Road Research Laboratory).